A 40mm Ø 8mm x76 C x40 E x12 G 16mm x20 J x4 L 30mm x8

B 110 mm x38 D Ø 10mm x4 F x4 I 32 mm x12 K 70mm x4 M x2

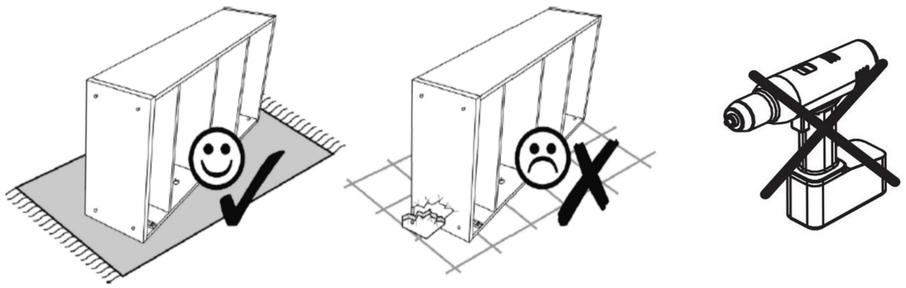

1.

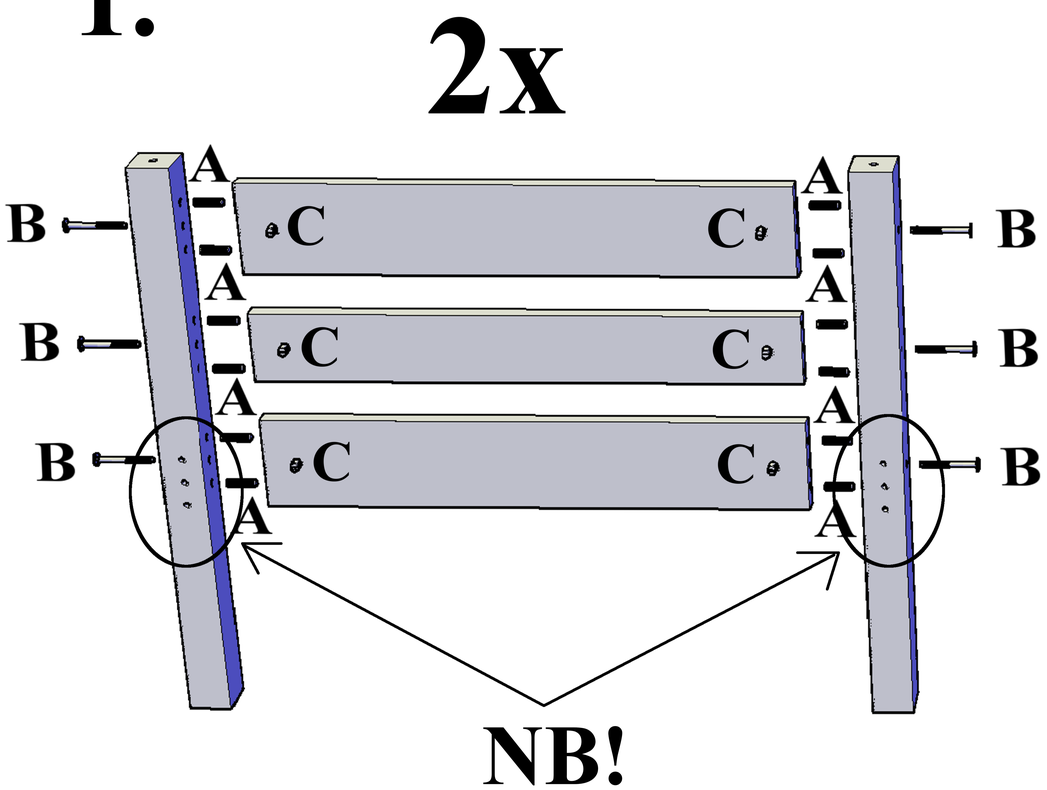

2.

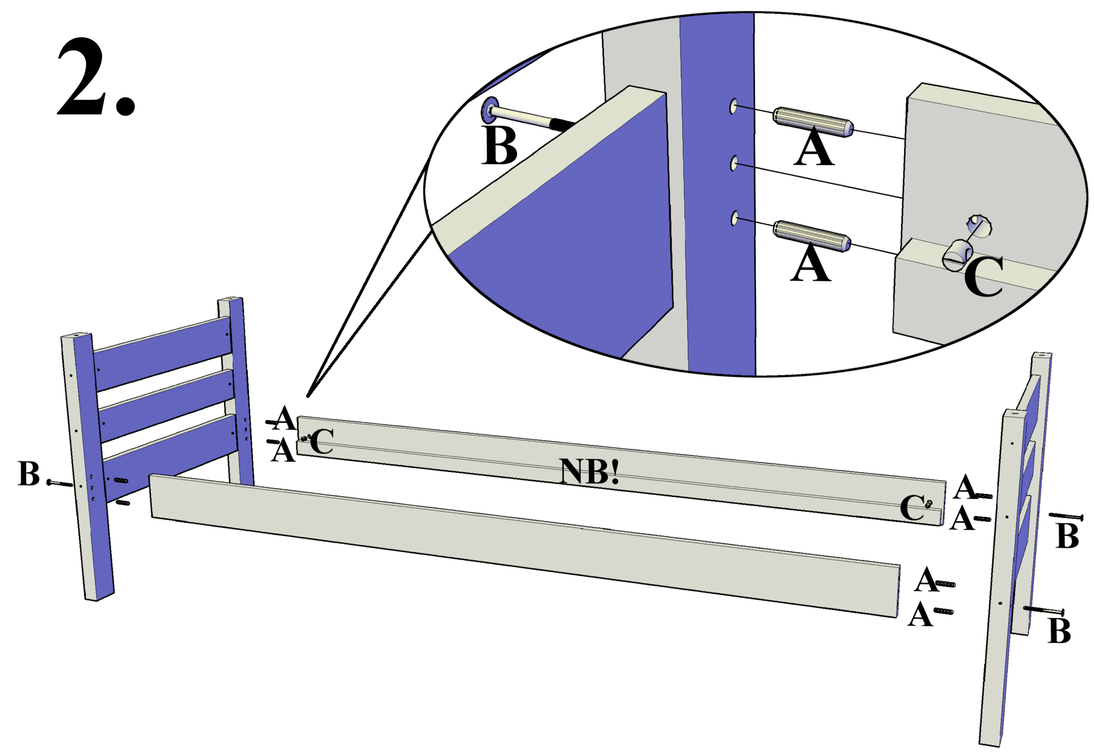

3.

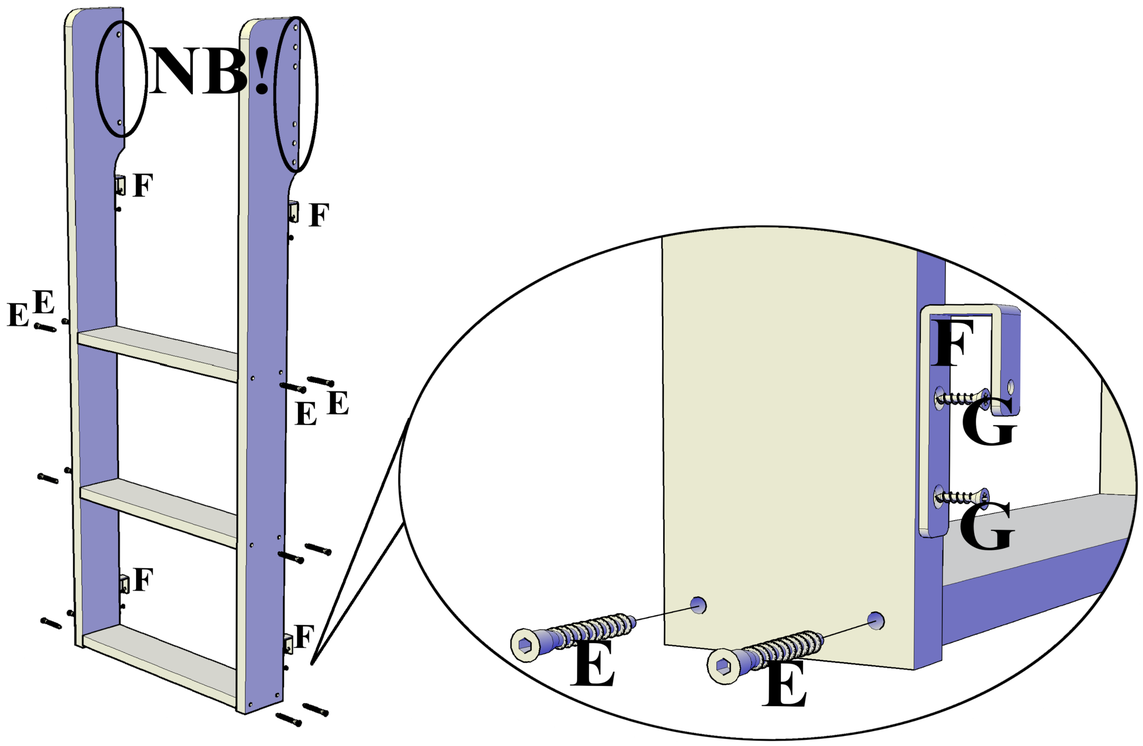
NB!
F
F
E E
E E
F
F
F
G
G
E
E

4.

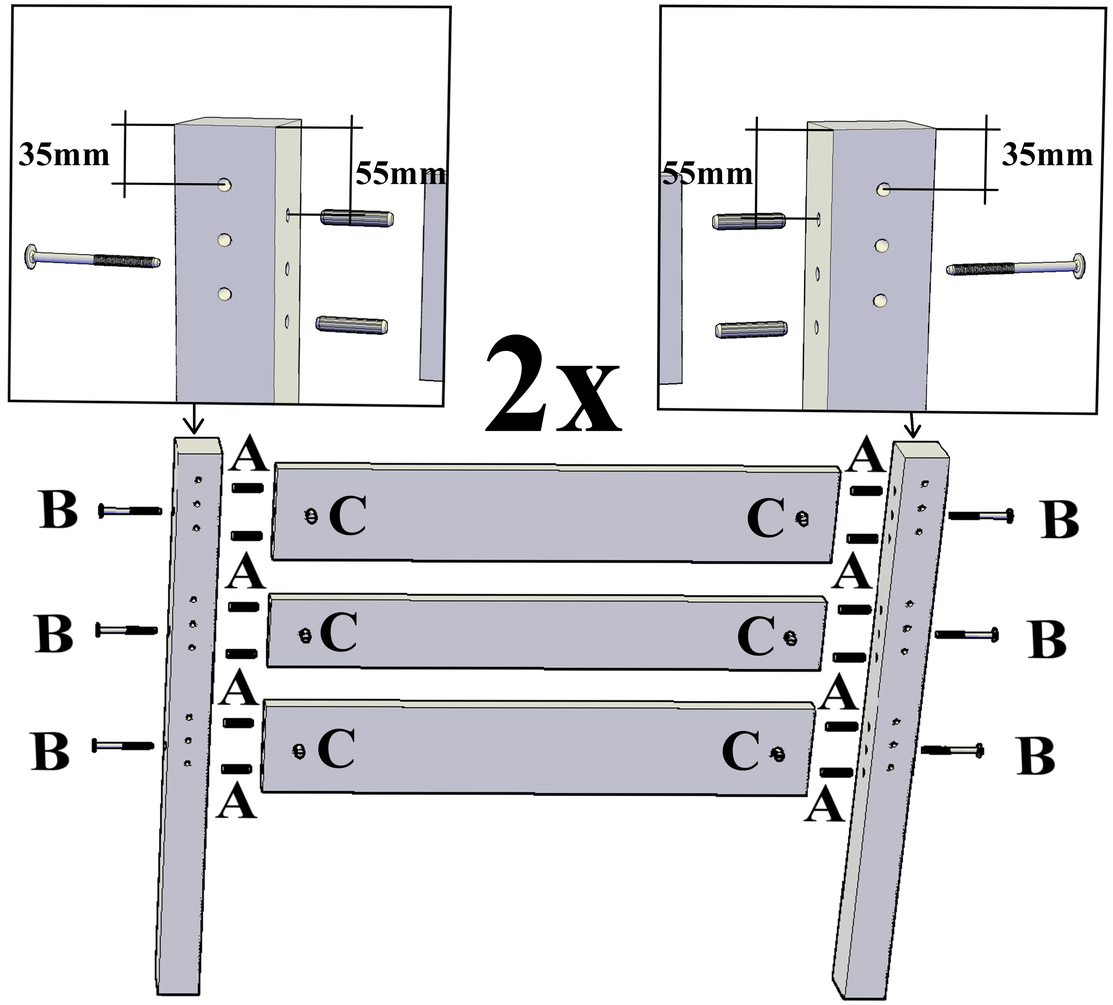
35mm
55mm
55mm
35mm
2x
A
B
C
C
A
B
C
C
A
B
C
C
A
B
A
B
A
B
A
B

5.

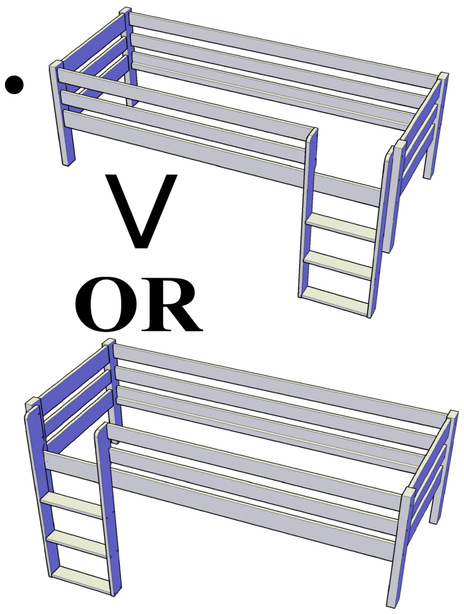
V
OR

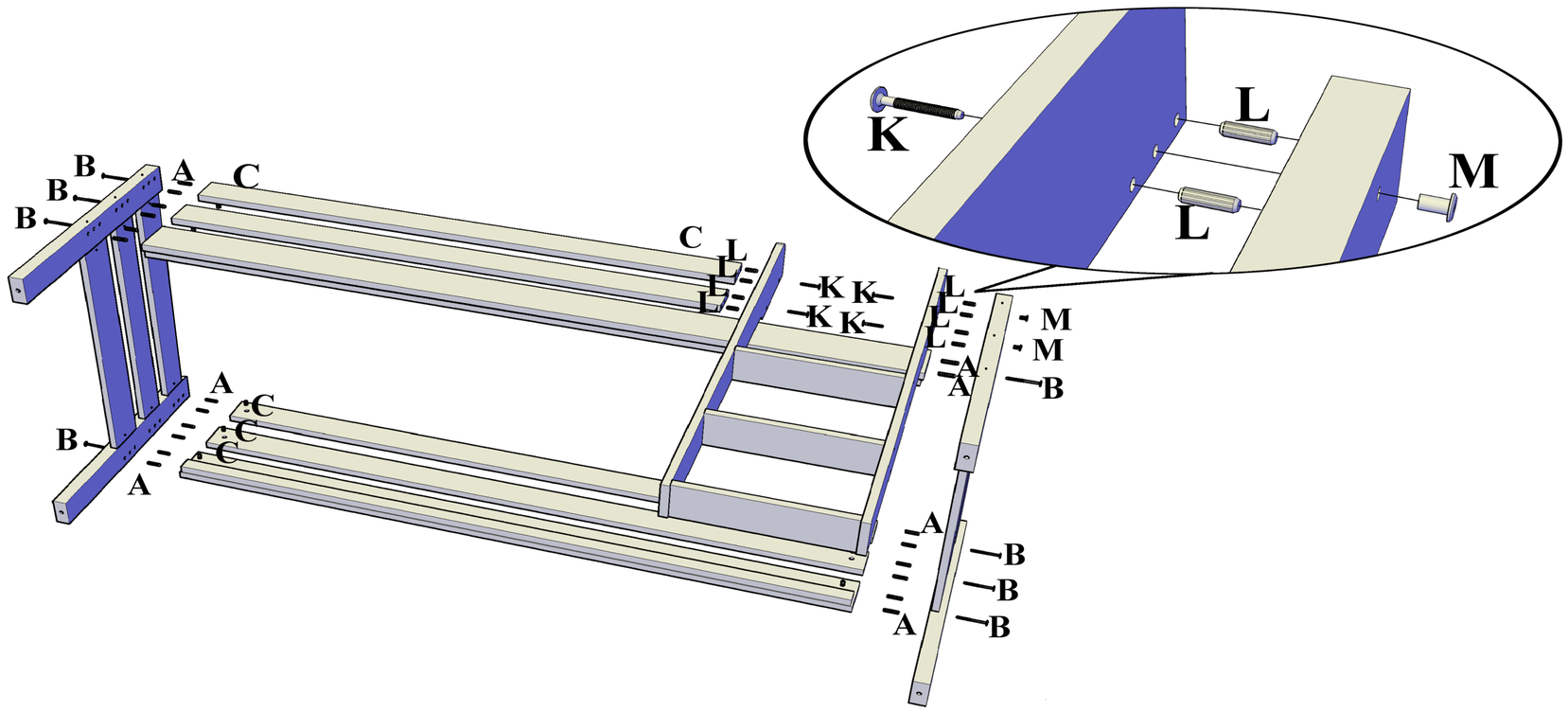
K
L
L
M
B
B
B
A
C
C
L
L
L
L
K K
K K
L
L
L
M
M
A
A
B
B
A
C
C
C
A
A
B
B
A
B
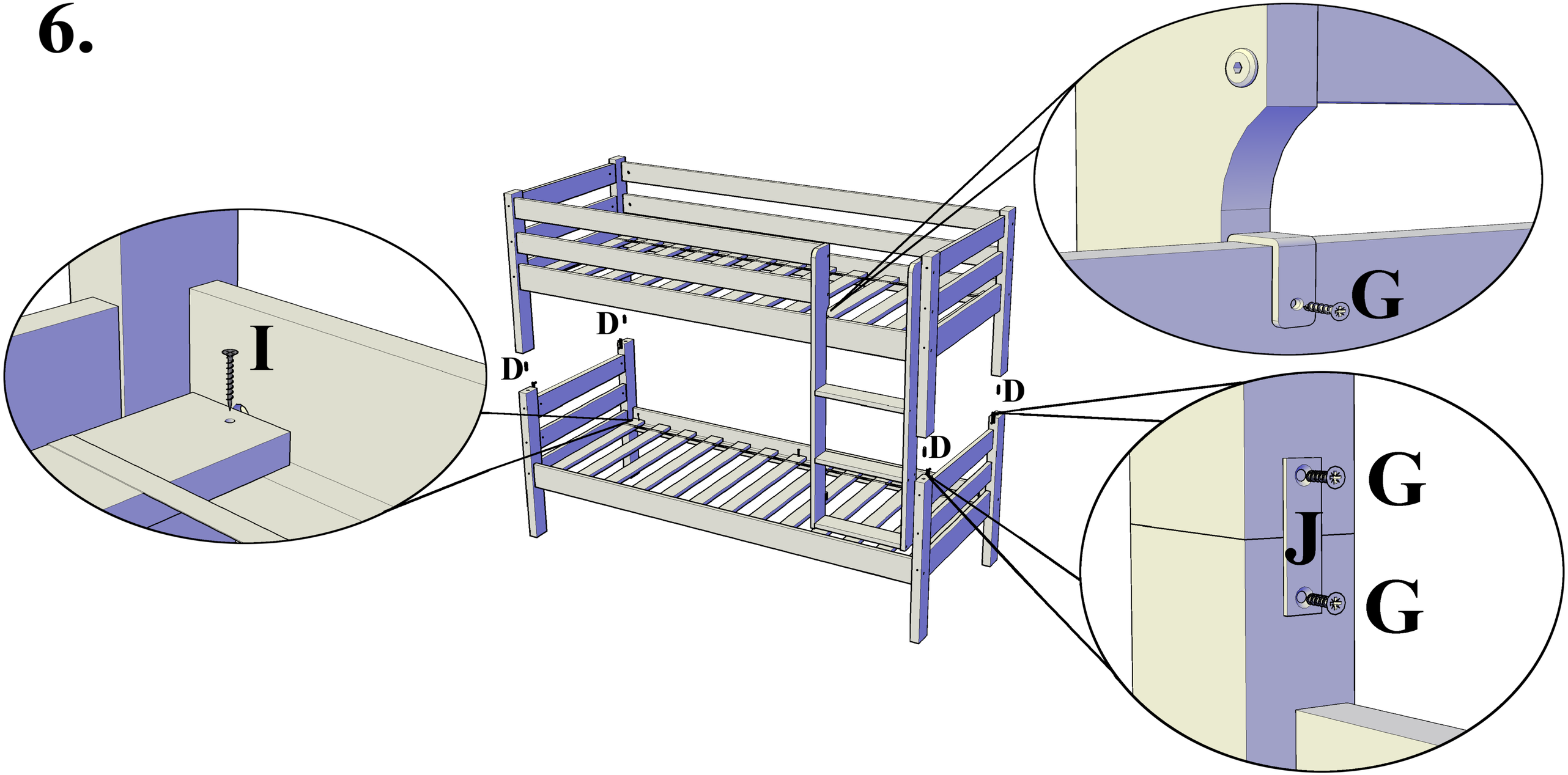
6.