1.

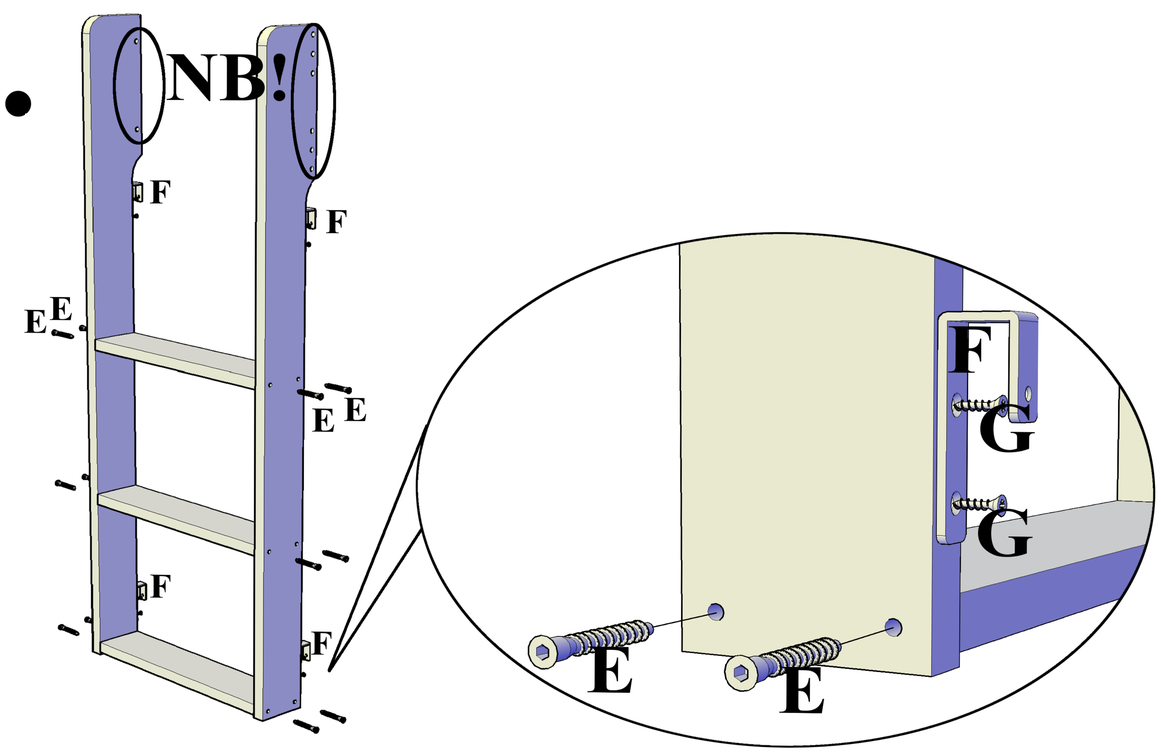

2.

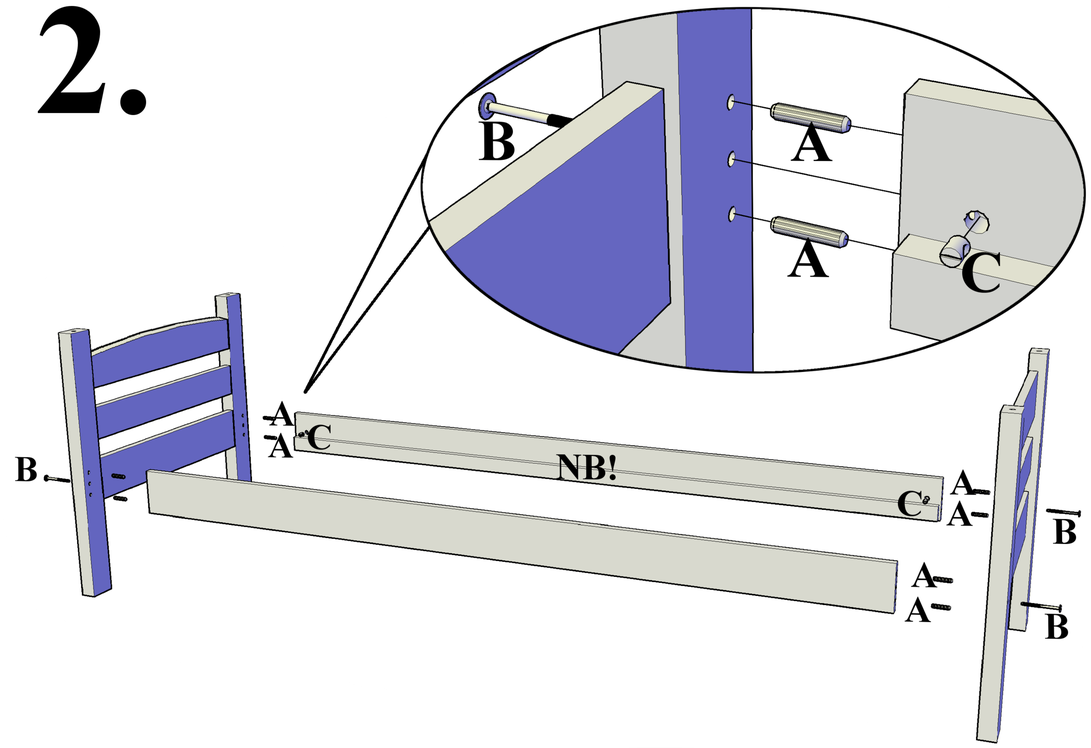

3.

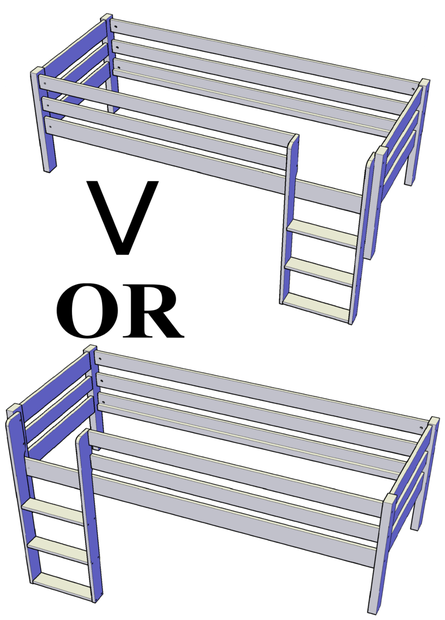

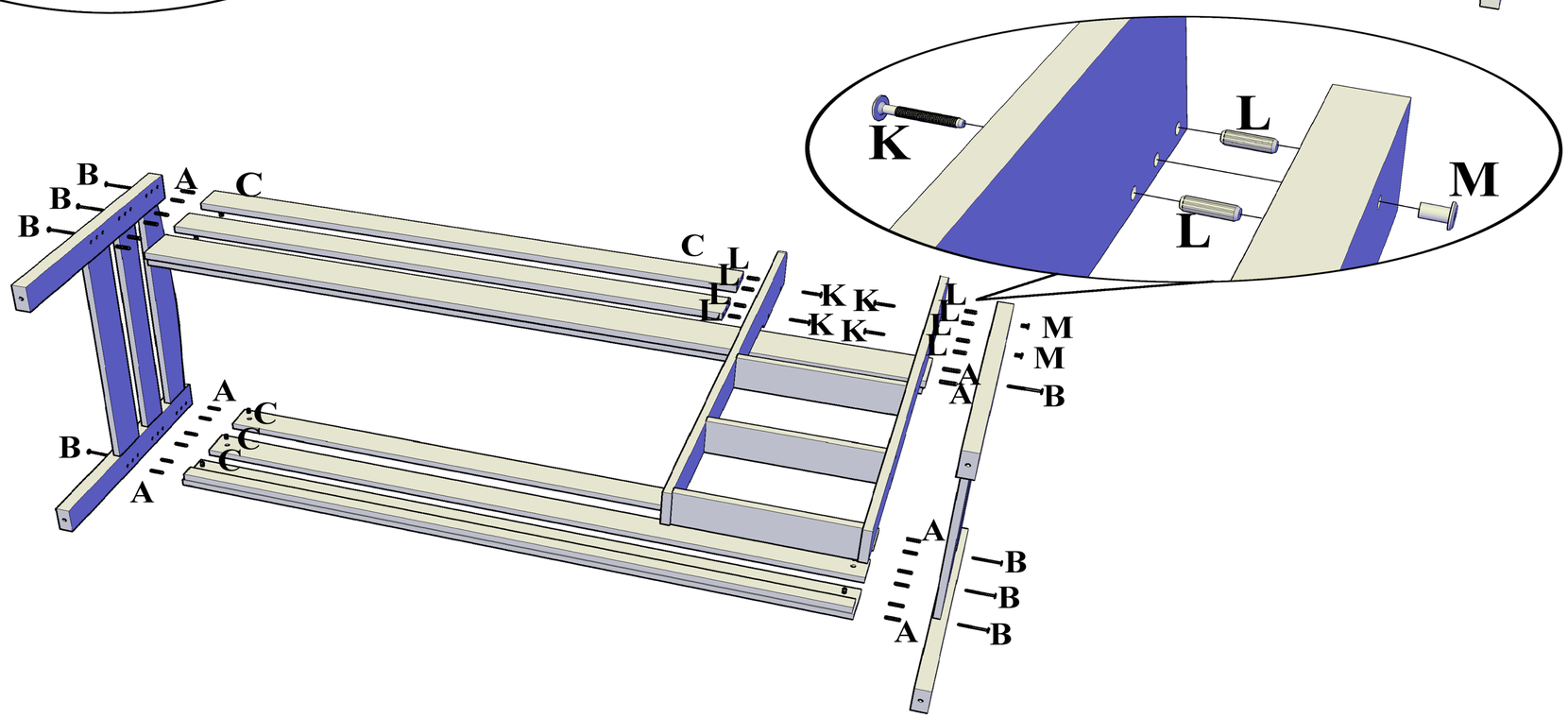

A 40mm Ø 8mm x28	C x16	E x12	G 16mm x20	J x4	L 30mm x8
B 110 mm x14	D Ø 10mm x4	F x4	I 32 mm x12	K 70mm x4	M x2
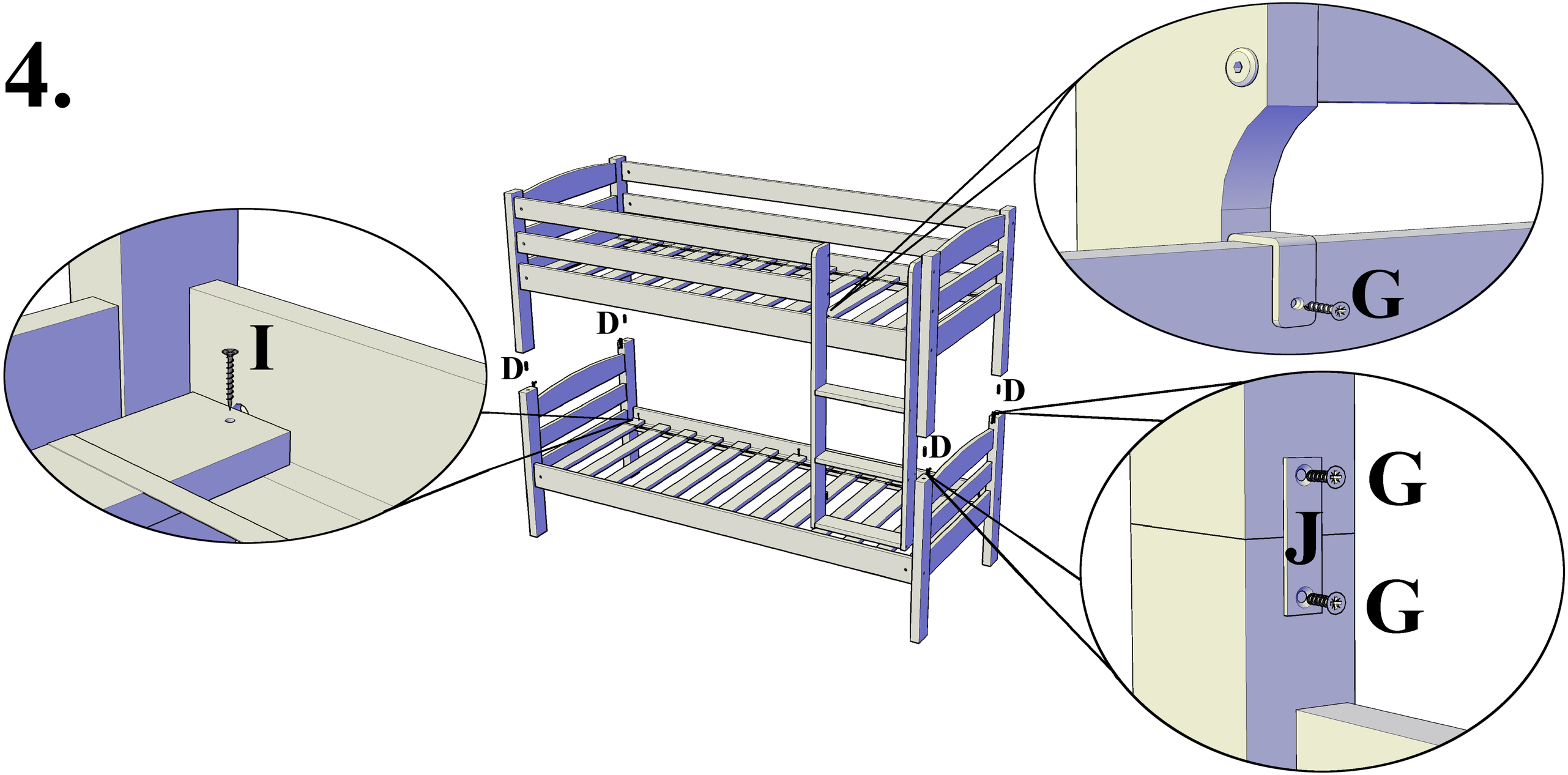
4.