1.

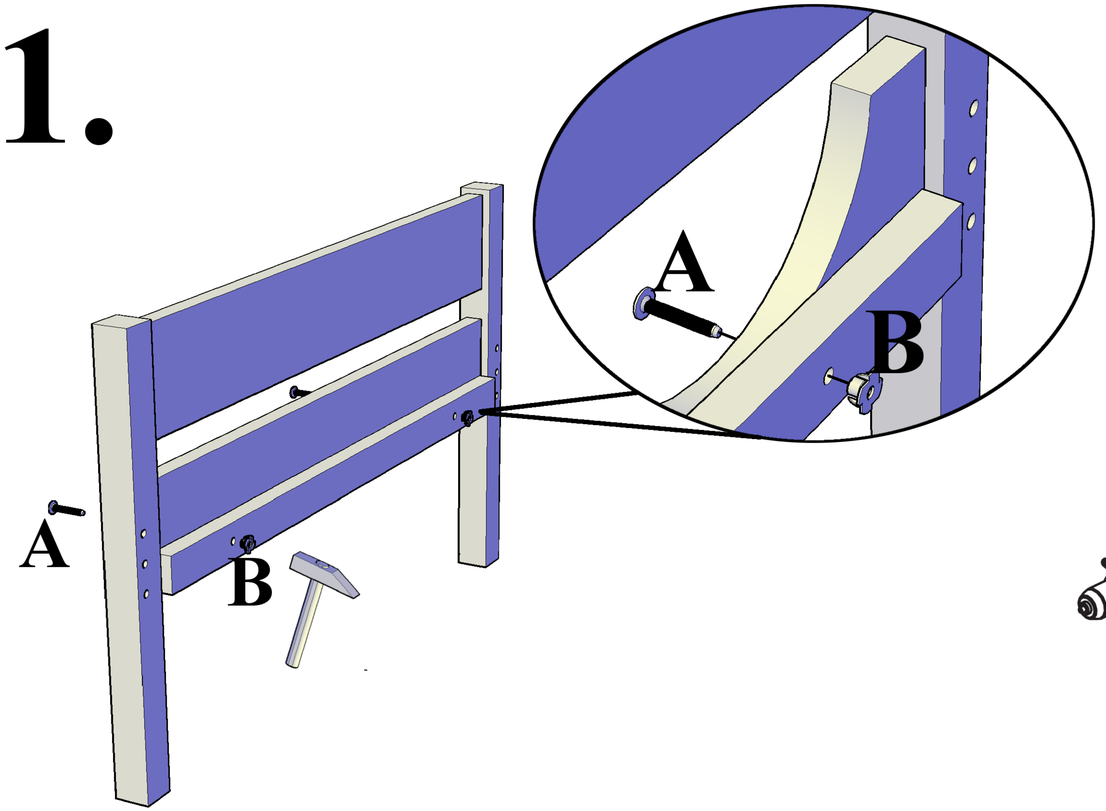

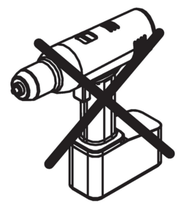

2.

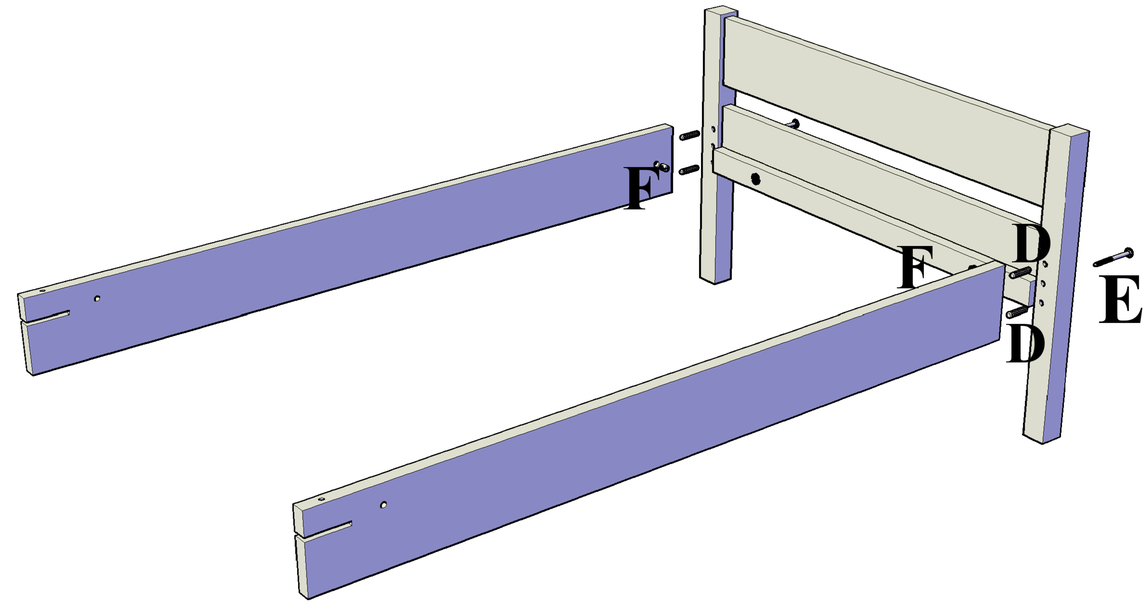

A	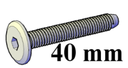 40 mm	x 4	F		x 8
B		x 4	H	32 mm	x 17
C	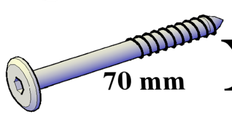 70 mm	x 4	J	45 mm	x 2
D	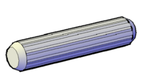	x 16	L	30 mm	x 2
E	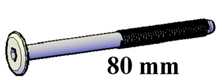 80 mm	x 8			

3.

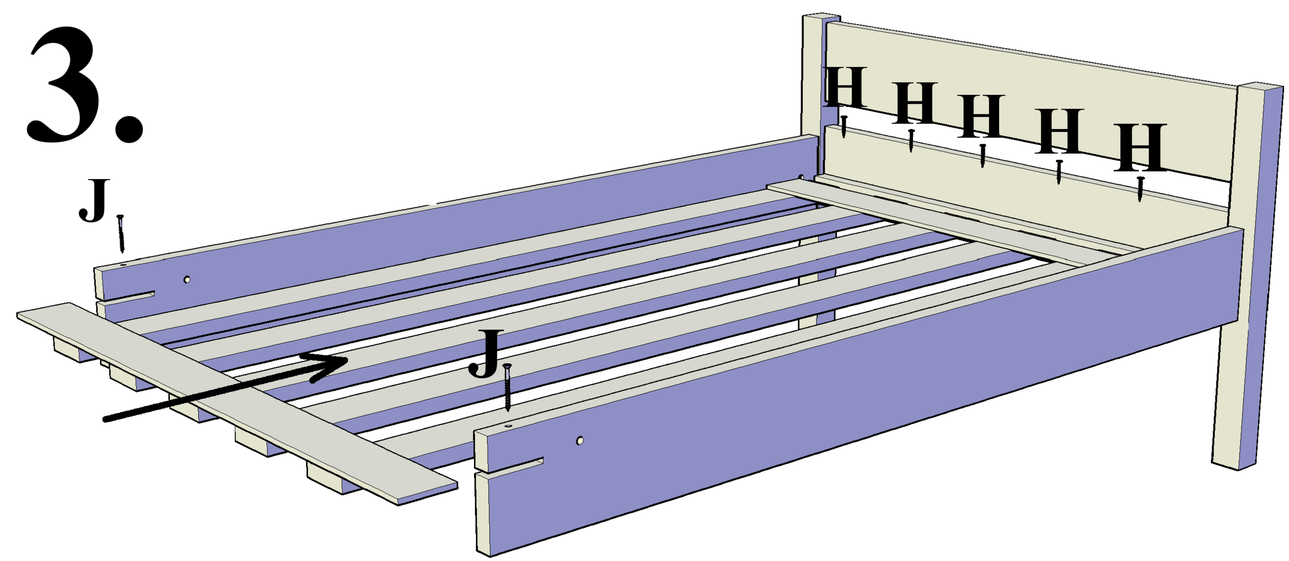

4.

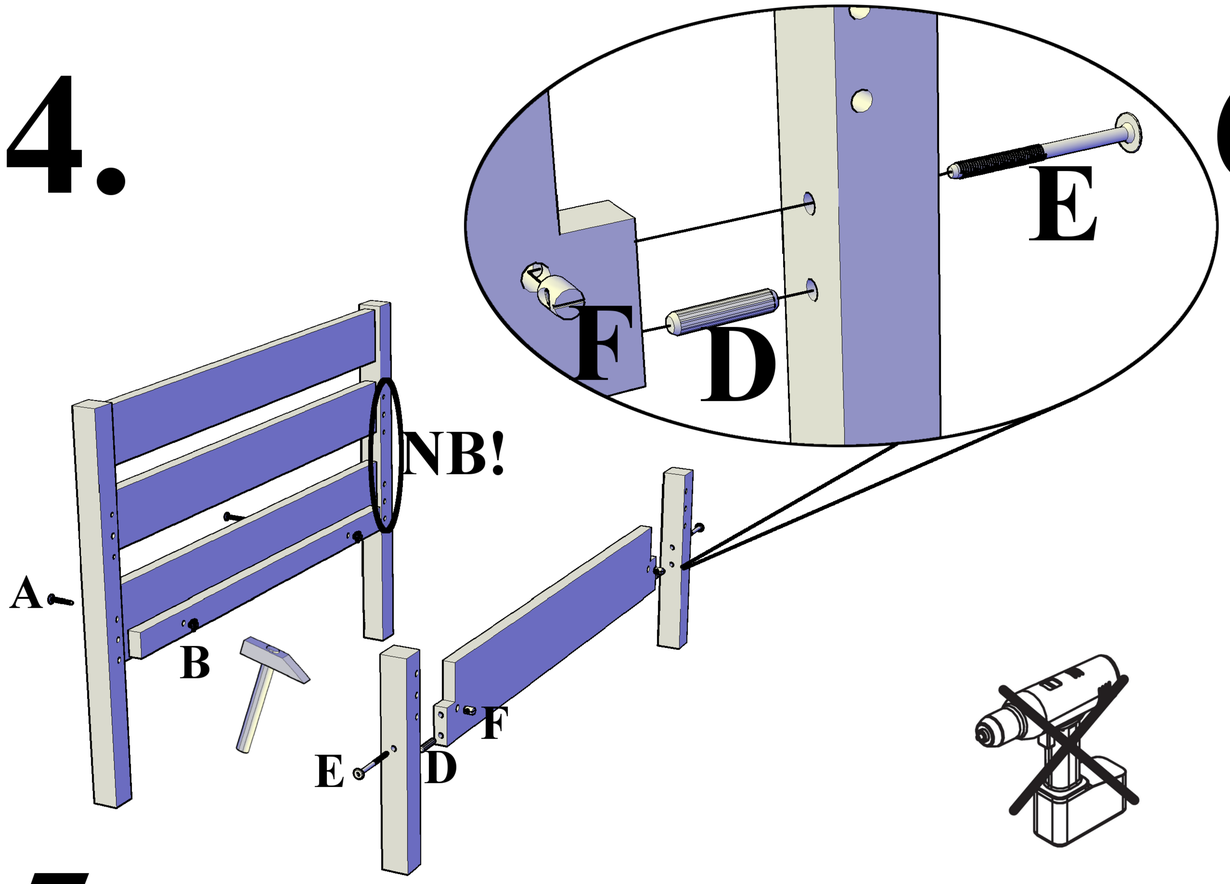

6.

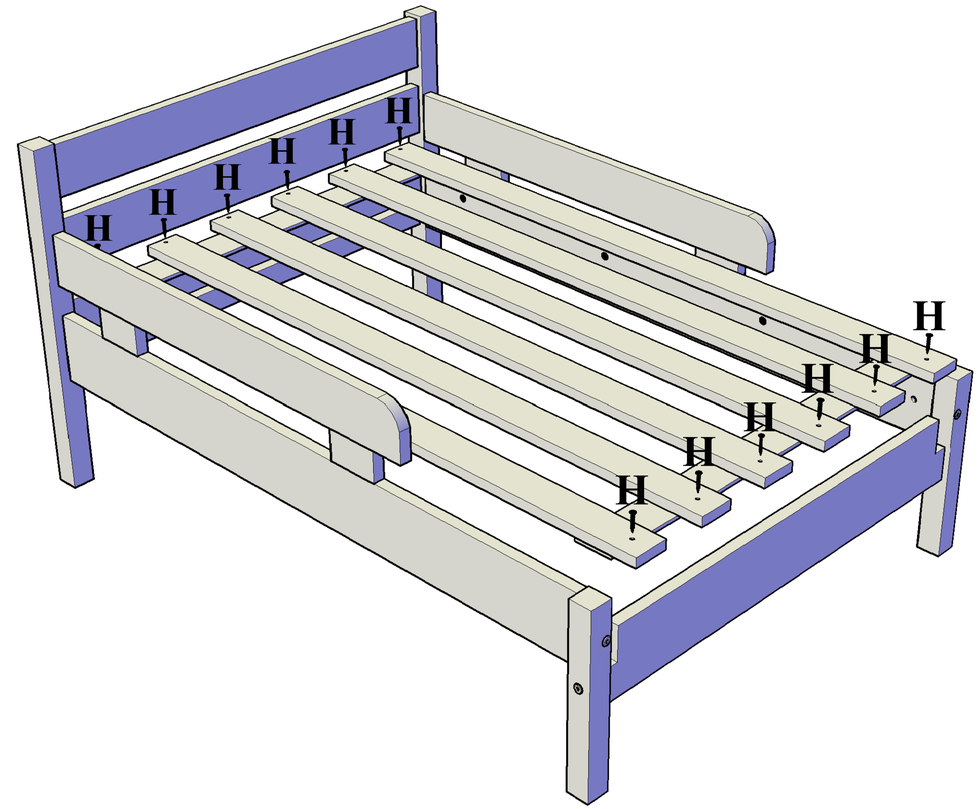

5.

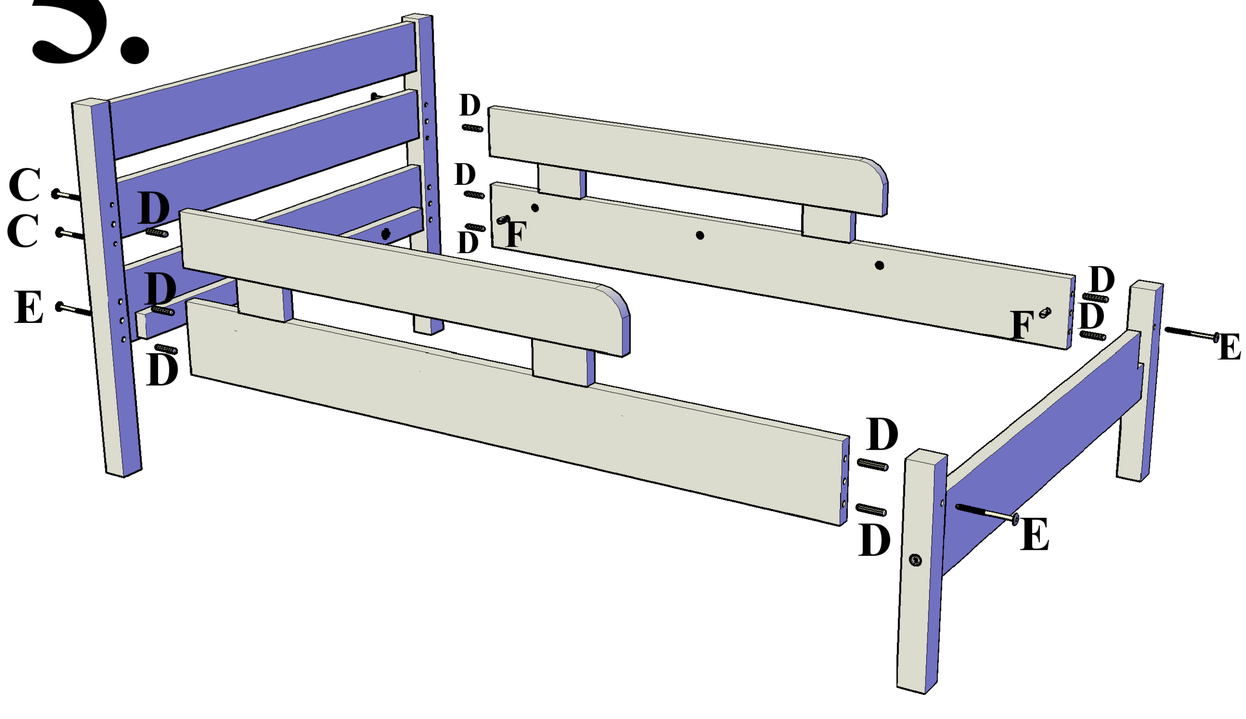
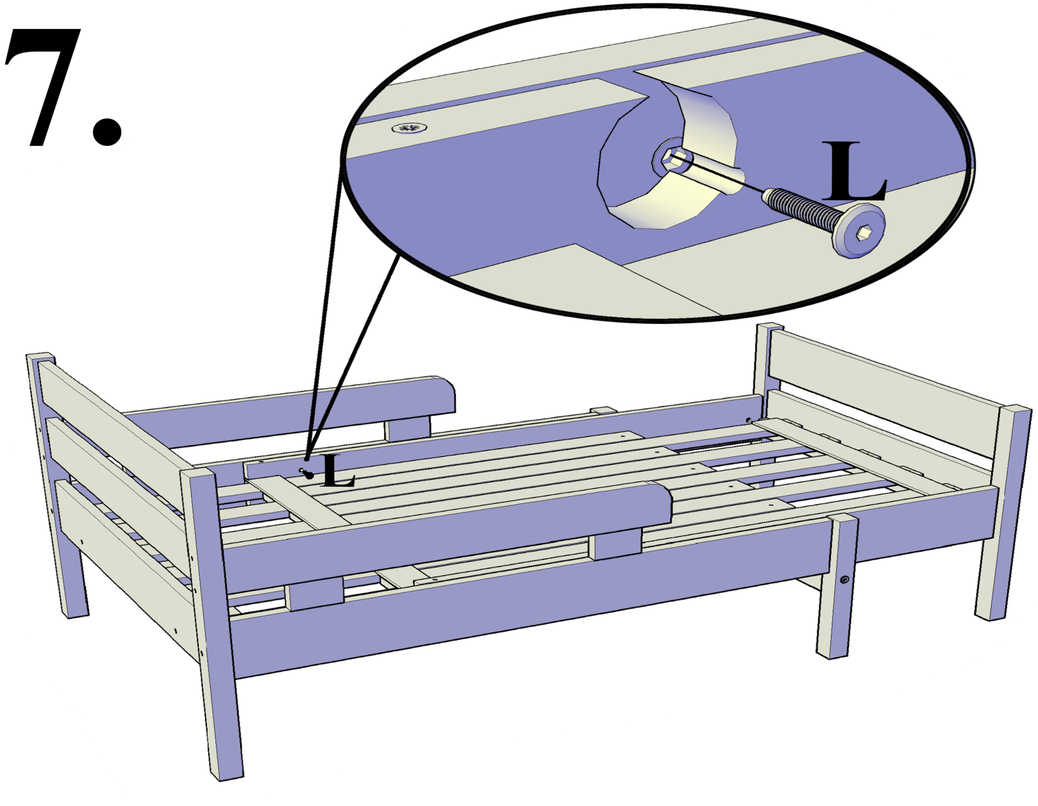
7.